Installation instructions

Inner Door & Firmware

(VCS-IDOOR) for Vigilon Compact panel

GENT by Honeywell

This leaflet provides instructions on how to replace inner door on a Vigilon Compact panel. The part VCS-IDOOR consists of a replacement door and a firmware chip.

Firmware 2211-148

Inner door

Removal

Before replacing the Inner door ensure that the panel mains and standby supply are both powered down.

- ☐ Unlock and open the Outer door of the panel and then remove it by lifting it up and out.
- ☐ Using the allen key located behind the outer door or a screwdriver, whichever is appropriate, open the inner door.

Inner door fixings

- ☐ Disconnect the ribbon cable at connector marked 'Keyboard' on the MCB.
- ☐ Disconnect the earth lead from the inner door
- ☐ Unhook the inner door and remove it by lifting it up and out.

Replacement

- ☐ Fit the new Inner door and reconnect the ribbon cable to the MCB connector marked 'Keyboard'.

Ensure previously removed earth lead is refitted on to the inner door.

Cage nuts

- ☐ Where fitted, remove the cage nuts from the backbox. To do this use a suitable screwdriver and turn the *cage nut-retaining washer* anticlockwise by a quarter turn and the push-out the nut from inside the backbox. Discard the nut as it is no longer required.

Cagenut
Retaining washer

Firmware

- ☐ For a panel having an old MCB, remove the loop card fitted in Card 2 slot, if one is fitted.
- ☐ Using suitable removal tool, remove the code chip from socket IC3 on the MCB and fit the firmware chip 2211-148 supplied.

Do not fit the supplied firmware in the new MCB. The firmware is supplied for fitting into an Old MCB. See diagram below to determine which MCB is fitted inside your panel.

- ☐ Power up the battery and then the mains to the panel.
- ☐ Close the Inner door and secure it to the backbox.
- ☐ Re-fit the outer door and after test lock the door.

NEW Master Control Board (new replacement MCB) - networkable

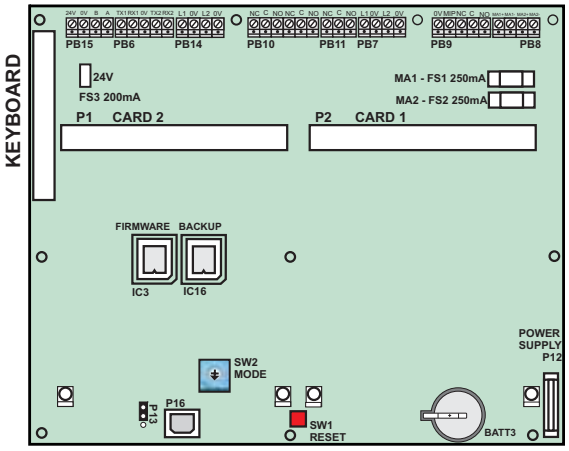

OLD Master Control Board - non networkable

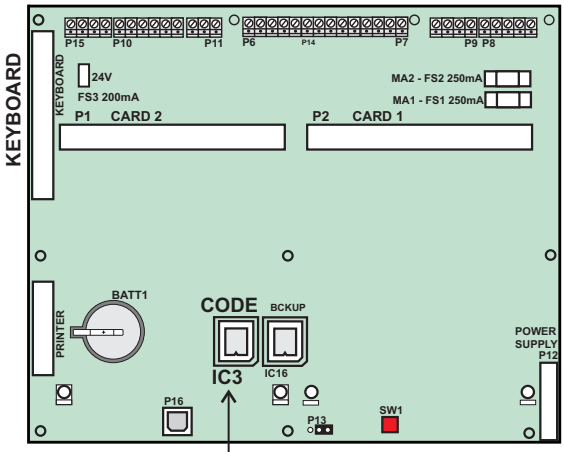

Firmware 2211-148

Correct orientation

← Notch

Test

Power up the panel and carry out the following test:

- ☐ ensure all indicators are working, by conducting a display test
- ☐ that the system fire plan is operational. This should be tested by generating a fire event at an MCP
- ☐ controls are operable, such as the panel's sound alarms and silence alarms buttons.

At the end of their useful life, the packaging, product and batteries should be disposed of via a suitable recycling centre and in accordance with national or local legislation.

WEEE Directive:
At the end of their useful life, the packaging, product and batteries should be disposed of via a suitable recycling centre.
Do not dispose of with your normal household waste. Do not burn.

Gent by Honeywell reserves the right to revise this publication from time to time and make changes to the content hereof without obligation to notify any person of such revisions of changes.

GENT
Hamilton Industrial Park, Waterside Road, Leicester LE5 1TN, UK
Website: www.gent.co.uk
Telephone +44 (0) 116 246 2000
Fax (UK): +44 (0)116 246 2300